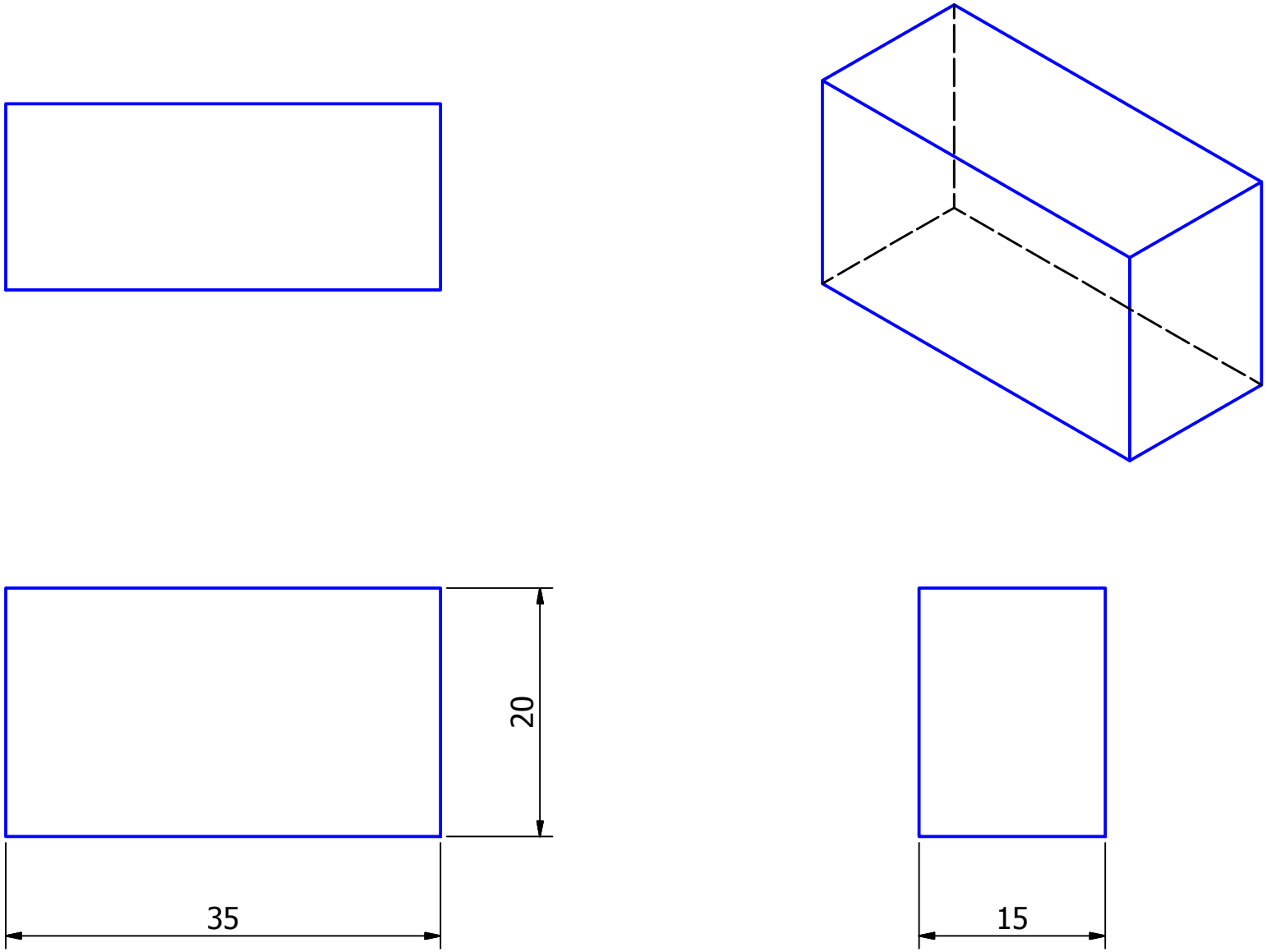

CADSTORY	TITLE	PART NO.	DESIGNED BY	DATE	VOLUME
	DWG501	P-501	SYPARK	13.05.28	

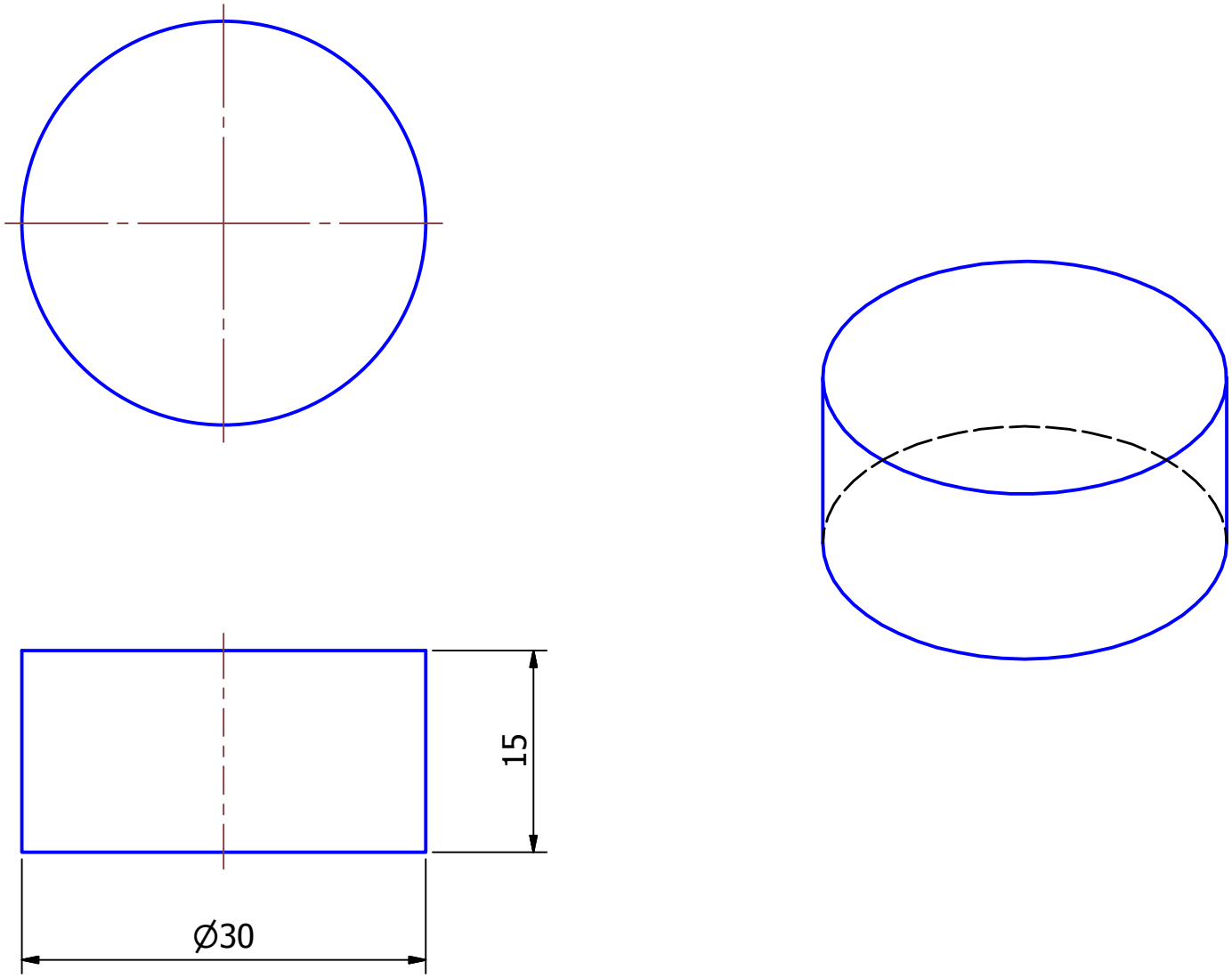

CADSTORY	TITLE	PART NO.	DESIGNED BY	DATE	VOLUME
	DWG-502	P-502	SYPARK	13.05.28	

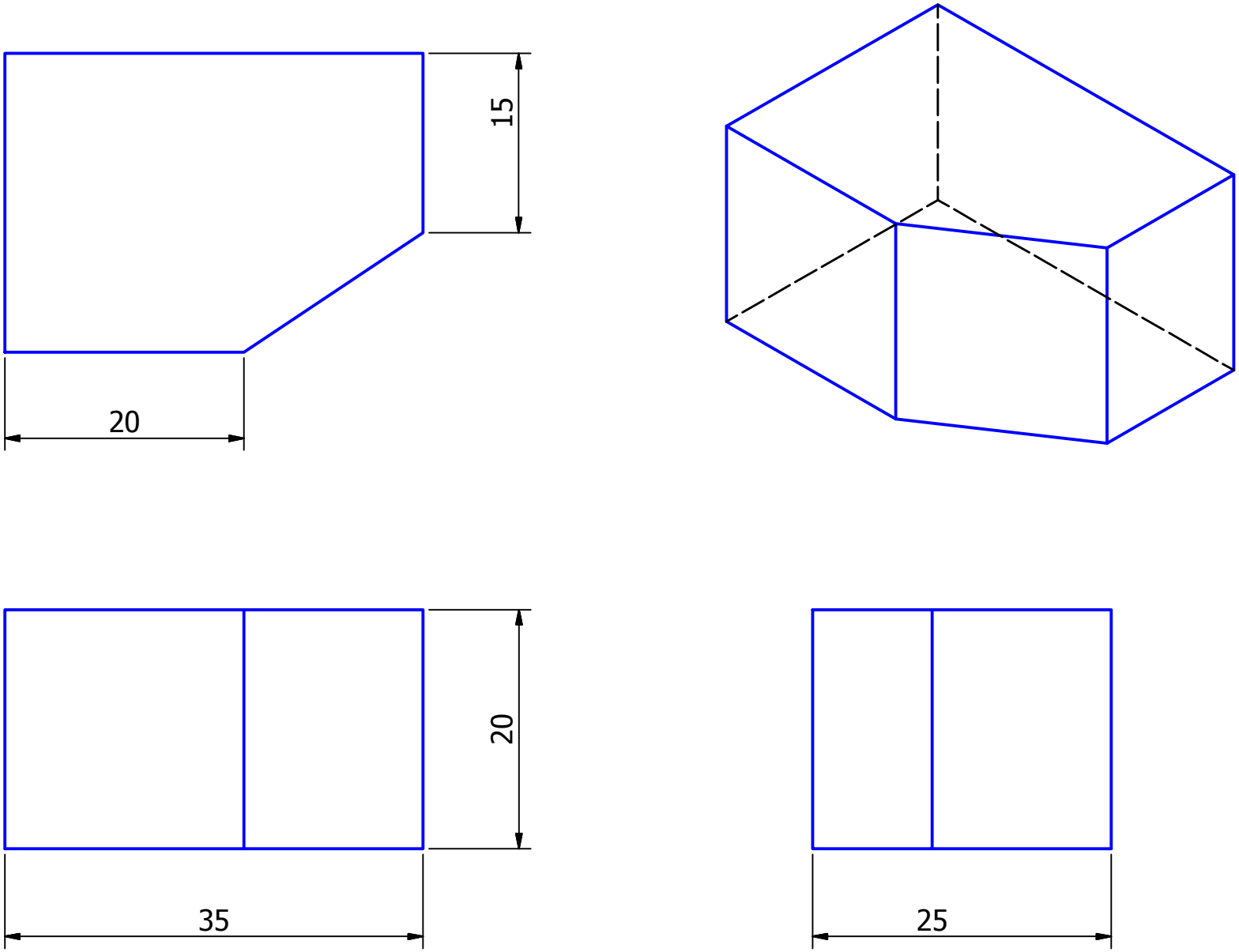

CADSTORY	TITLE	PART NO.	DESIGNED BY	DATE	VOLUME
	DWG503	P-503	SYPARK	13.05.28	

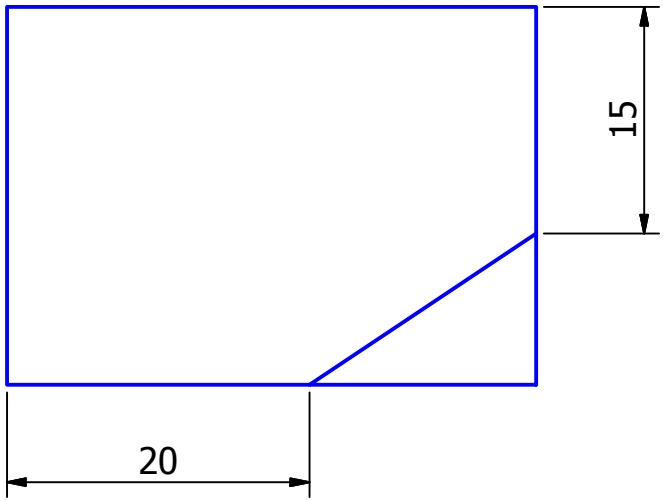

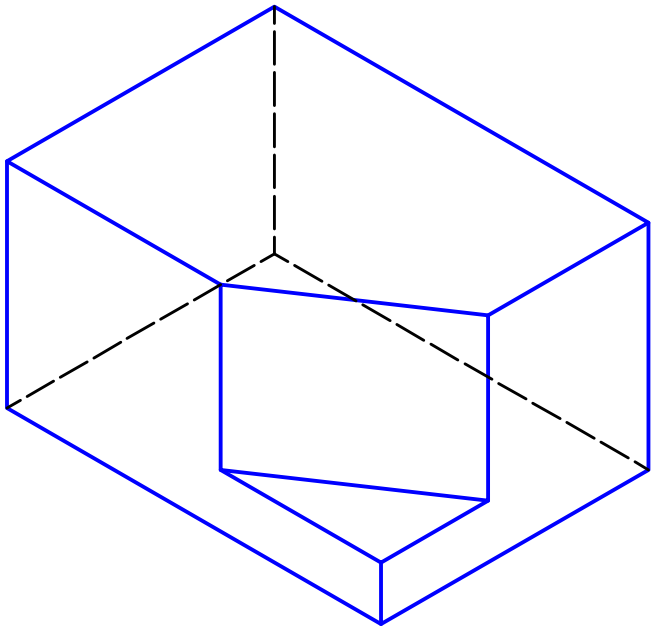

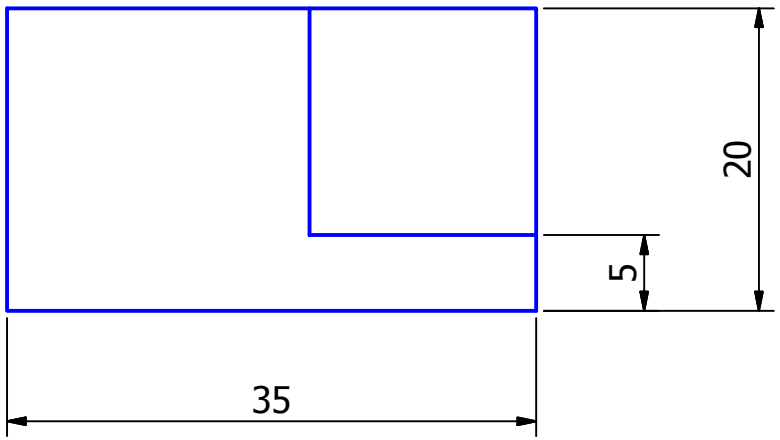

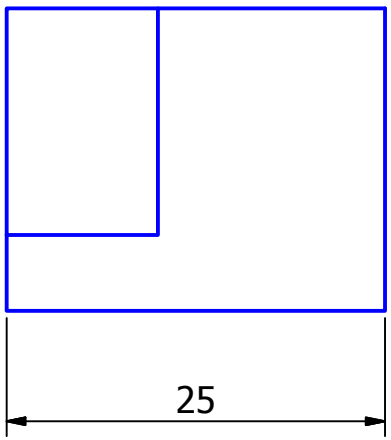

CADSTORY	TITLE	PART NO.	DESIGNED BY	DATE	VOLUME
	DWG504	P-504	SYPARK	13.05.28	

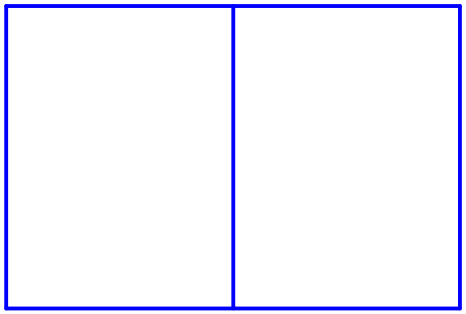

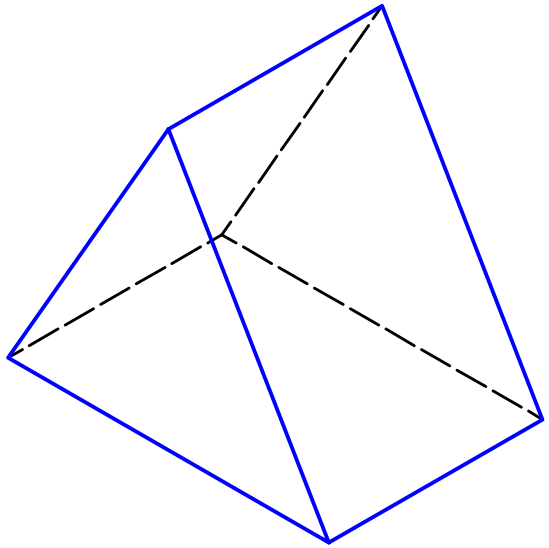

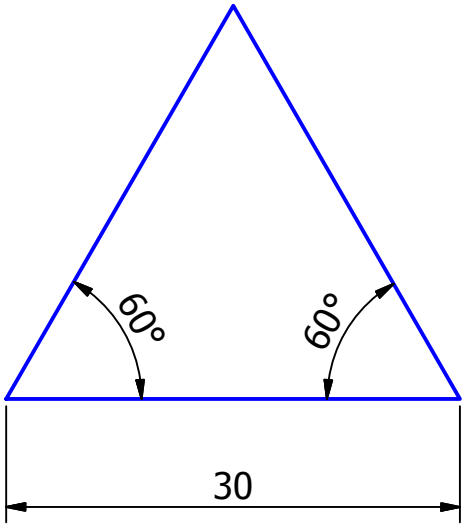

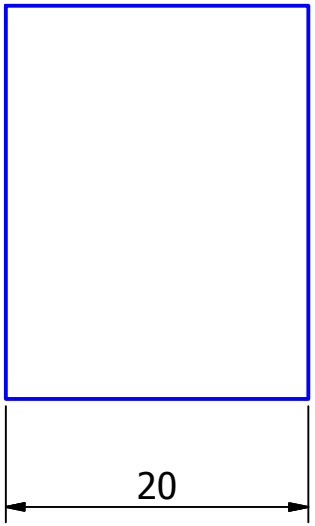

CADSTORY	TITLE	PART NO.	DESIGNED BY	DATE	VOLUME
	DWG505	P-505	SYPARK	13.05.28	

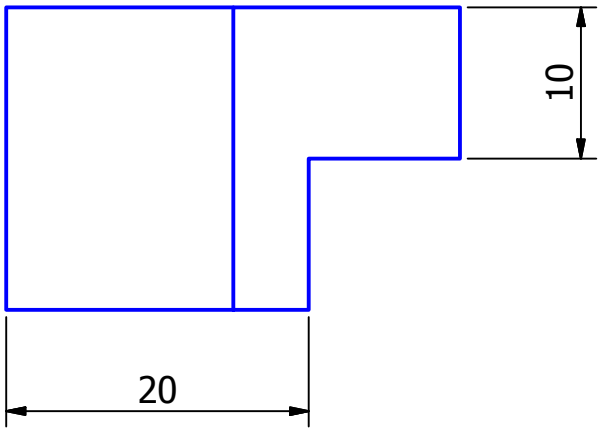

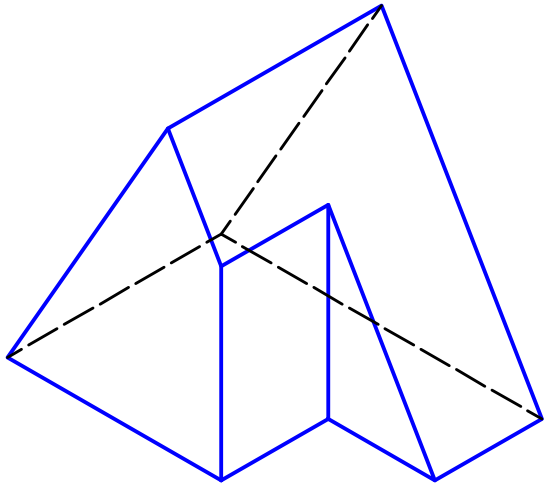

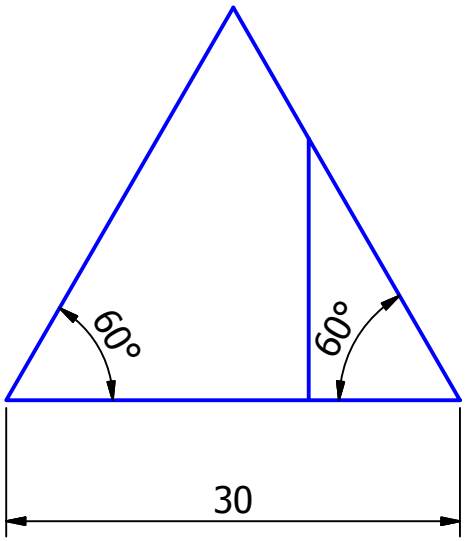

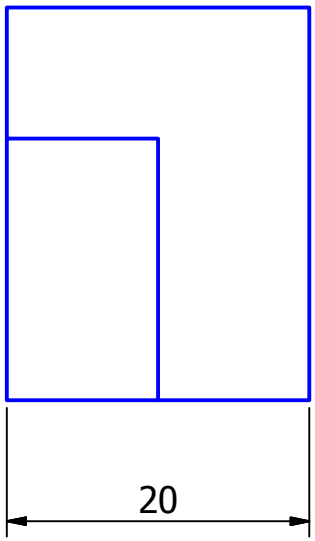

CADSTORY	TITLE	PART NO.	DESIGNED BY	DATE	VOLUME
	DWG506	P-506	SYPARK	13.05.28	

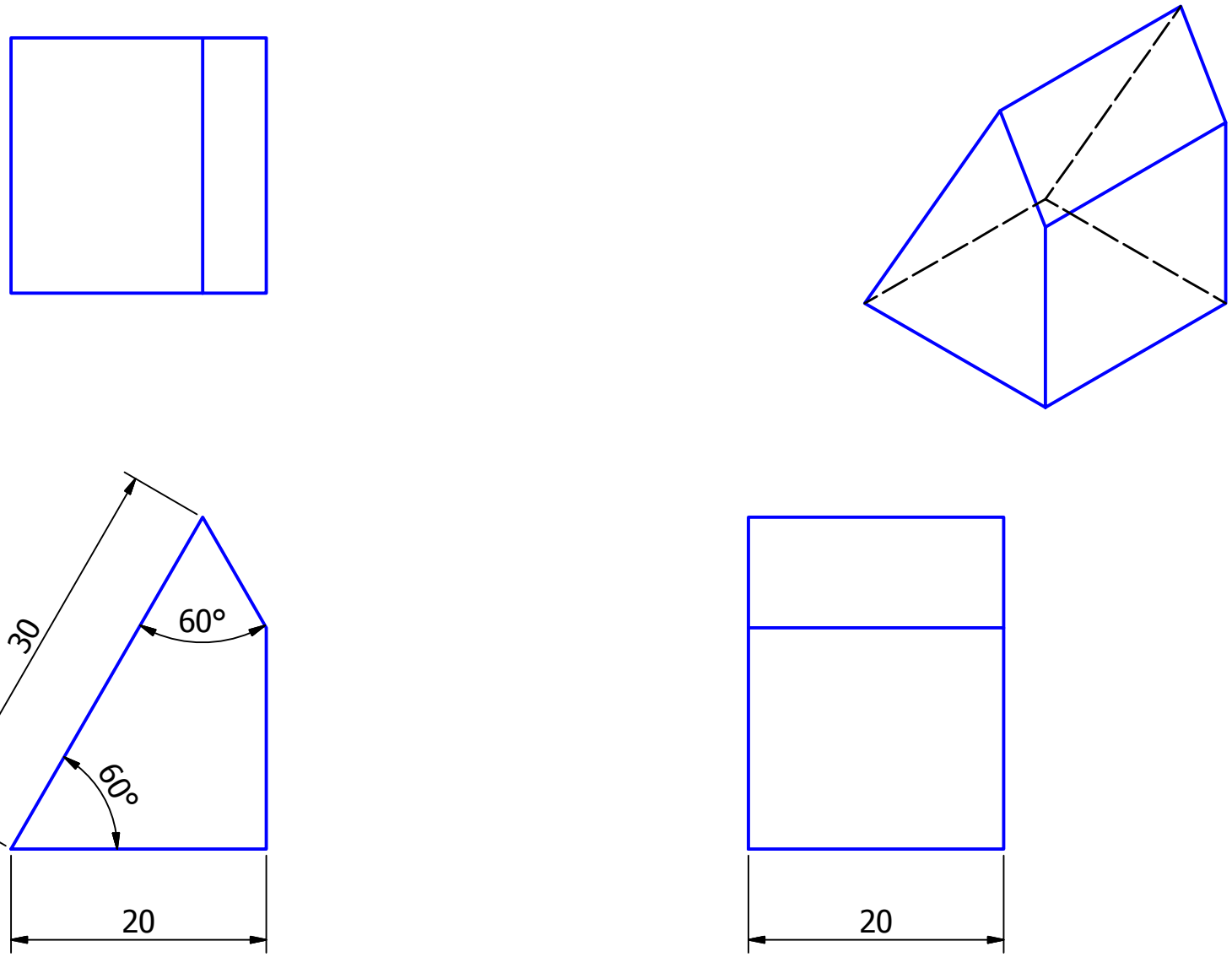

CADSTORY	TITLE	PART NO.	DESIGNED BY	DATE	VOLUME
	DWG-507	P-507	SYPARK	13.05.28	

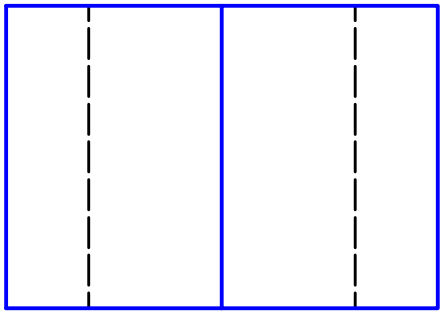

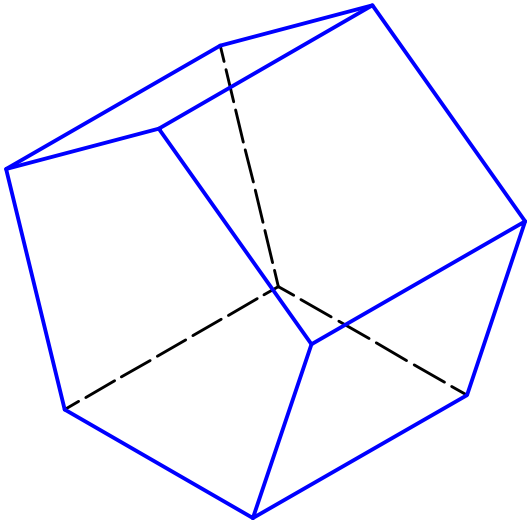

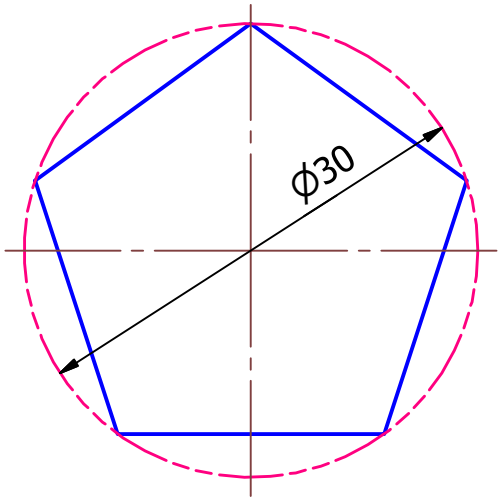

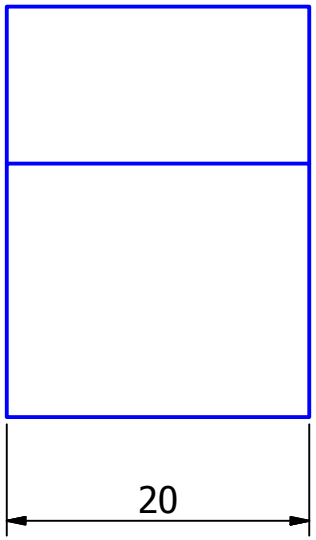

CADSTORY	TITLE	PART NO.	DESIGNED BY	DATE	VOLUME
	DWG-508	P-508	SYPARK	13.05.28	

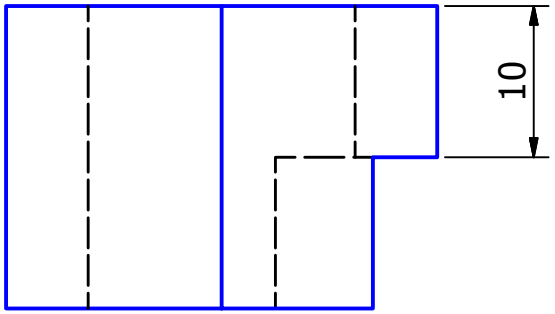

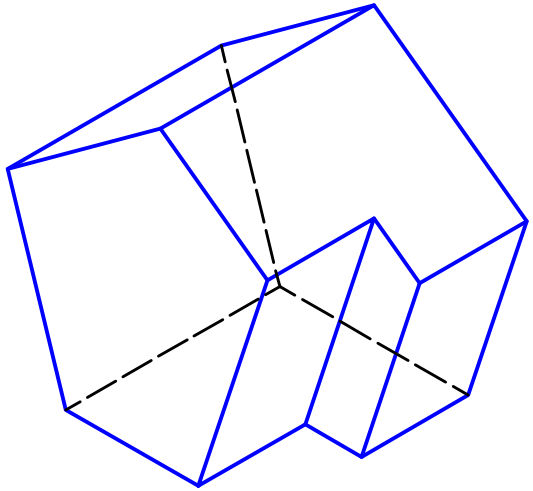

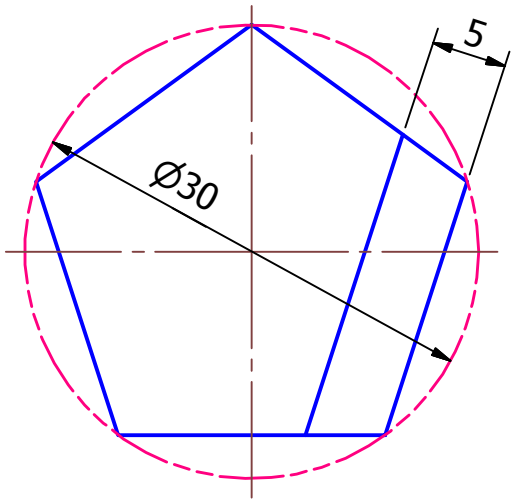

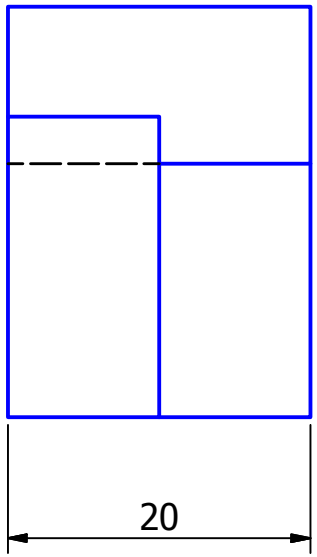

CADSTORY	TITLE	PART NO.	DESIGNED BY	DATE	VOLUME
	DWG-509	P-509	SYPARK	13.05.28	

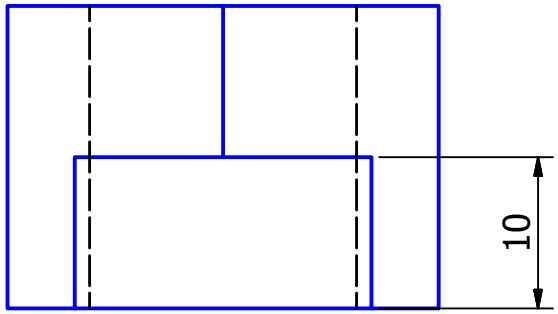

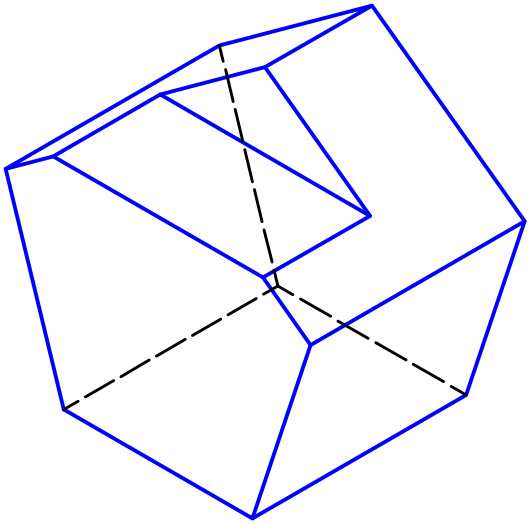

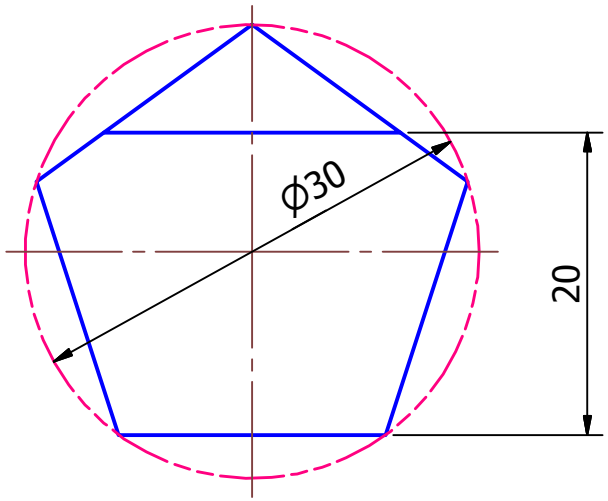

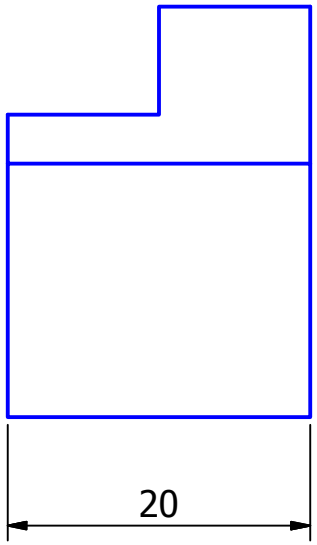

CADSTORY	TITLE	PART NO.	DESIGNED BY	DATE	VOLUME
	DWG510	P-510	SYPARK	13.05.28	

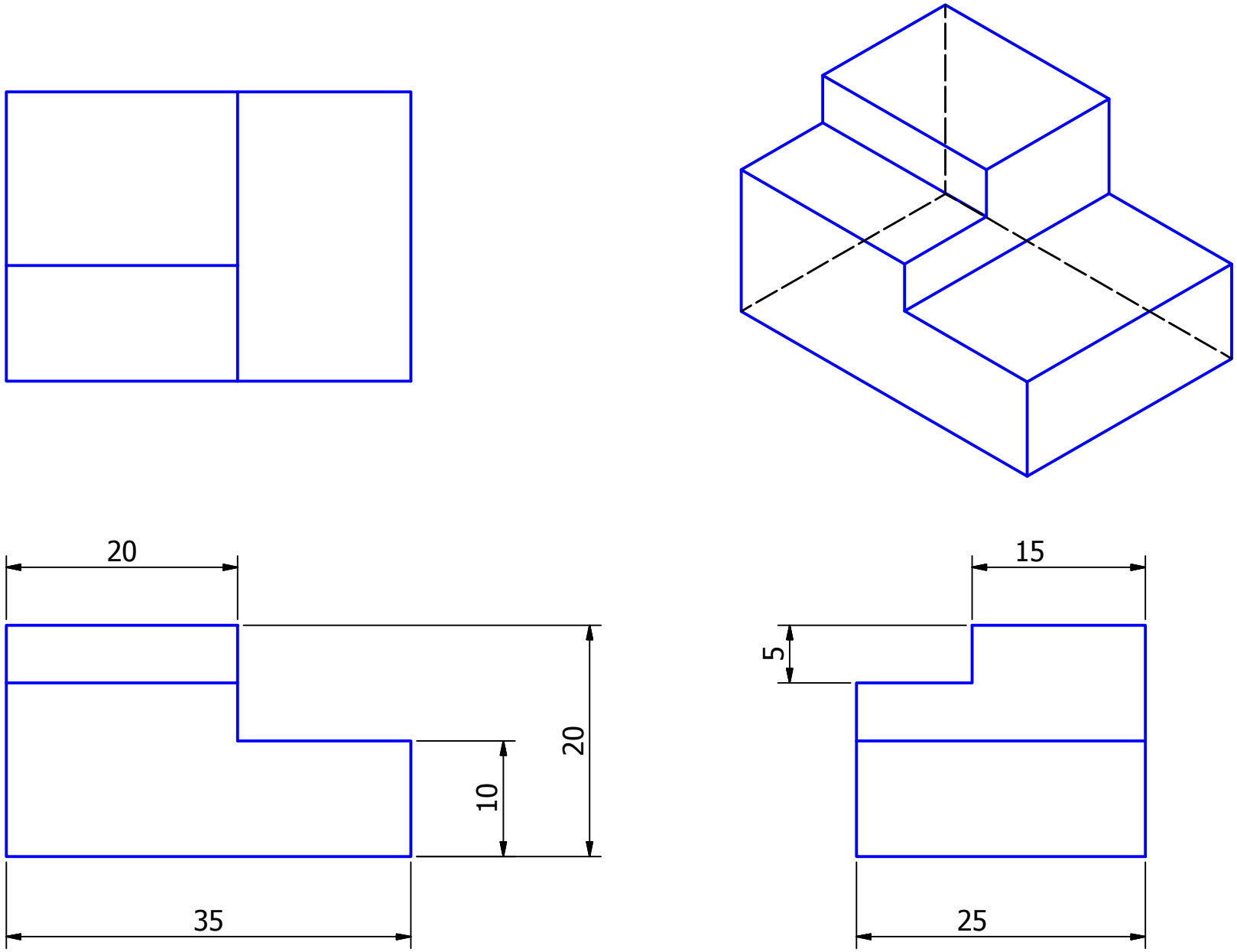

CADSTORY	TITLE	PART NO.	DESIGNED BY	DATE	VOLUME
	DWG511	P-511	SYPARK	13.05.28	

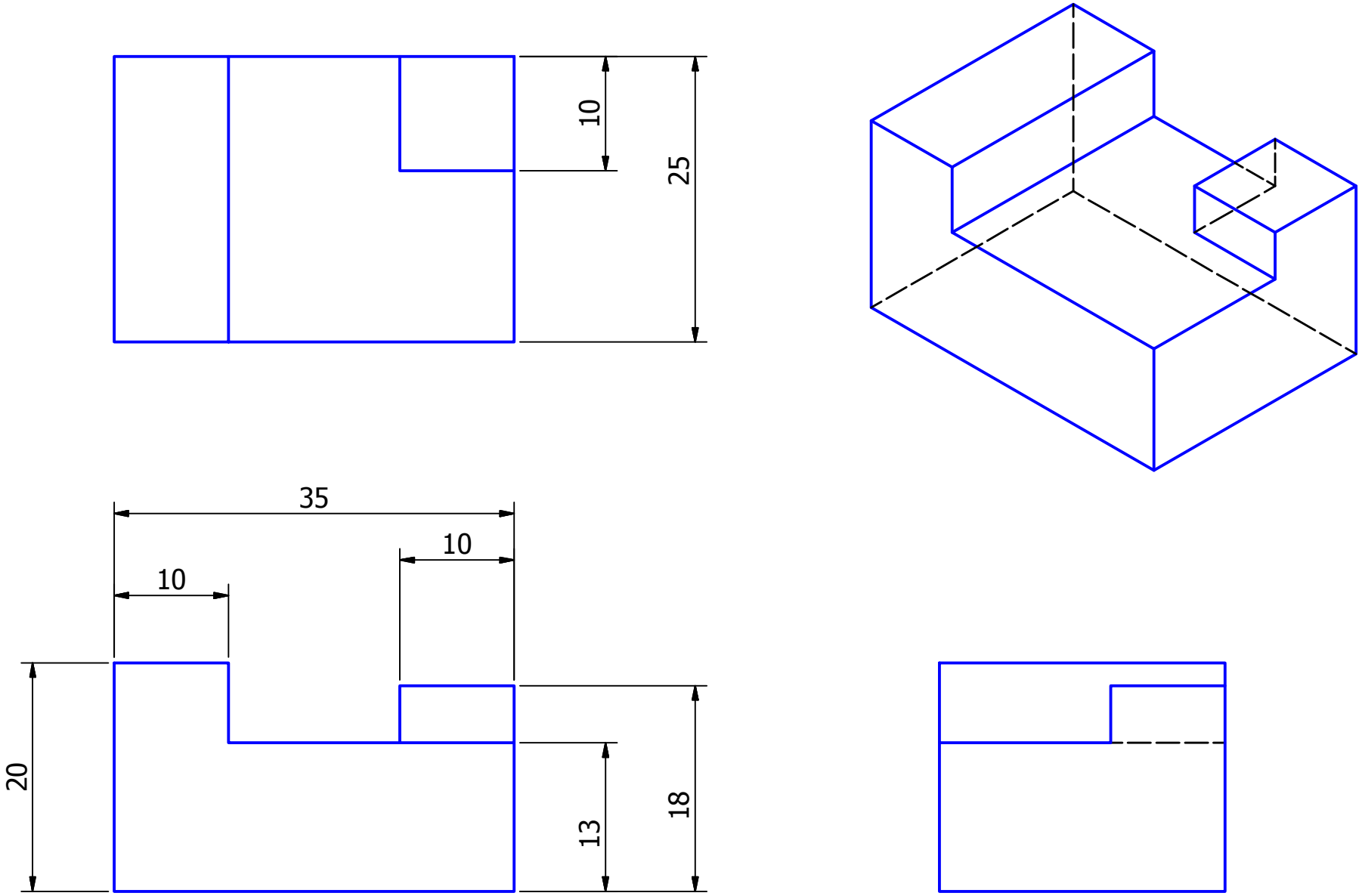

CADSTORY	TITLE	PART NO.	DESIGNED BY	DATE	VOLUME
	DWG512	P-512	SYPARK	13.05.28	

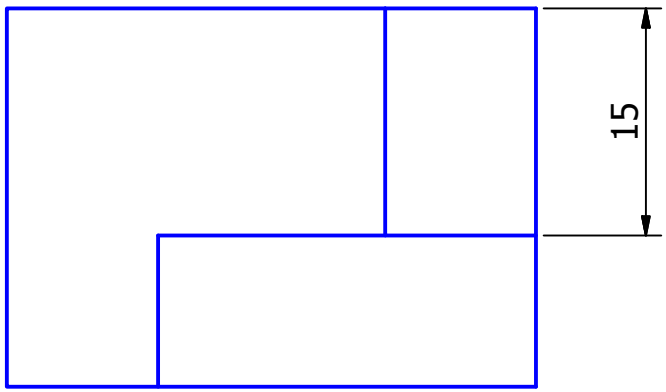

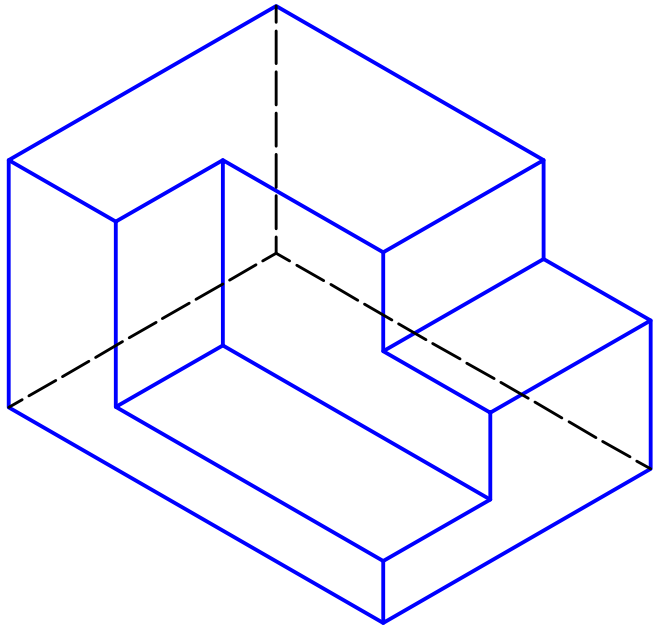

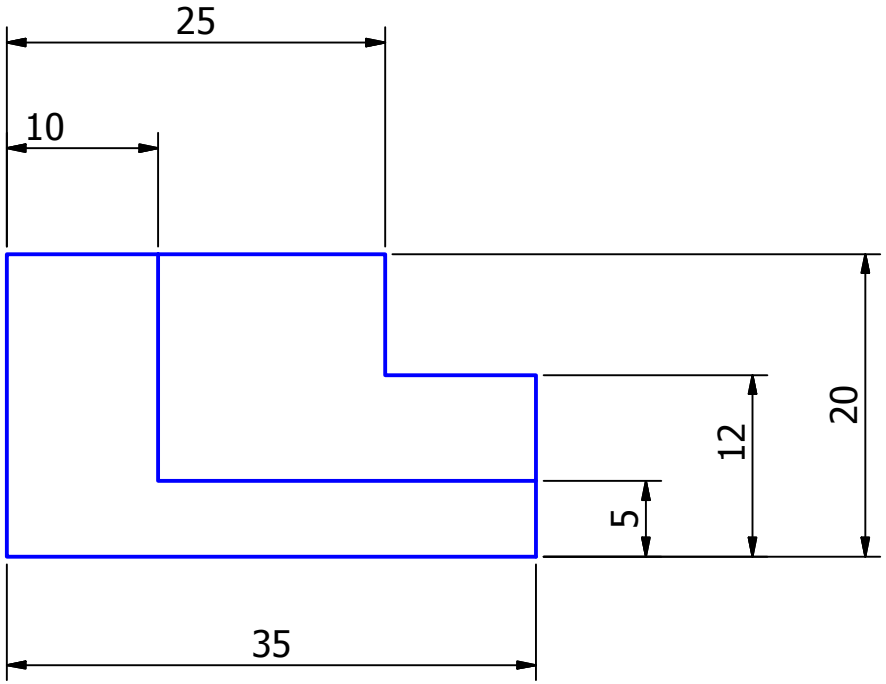

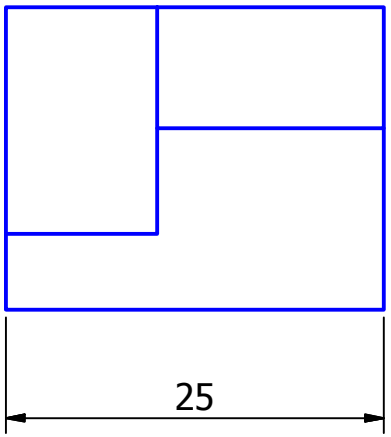

CADSTORY	TITLE	PART NO.	DESIGNED BY	DATE	VOLUME
	DWG513	P-513	SYPARK	13.05.28	

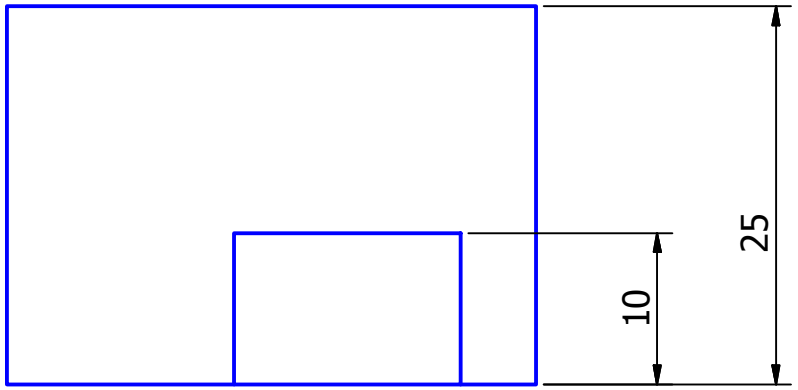

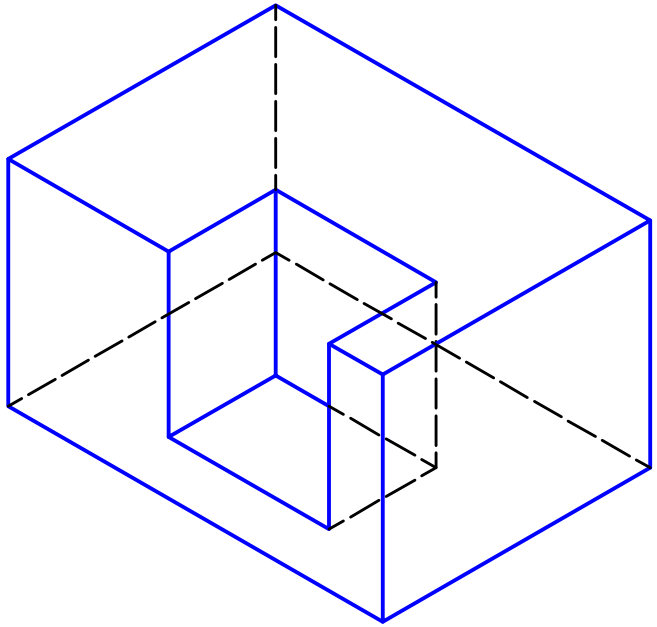

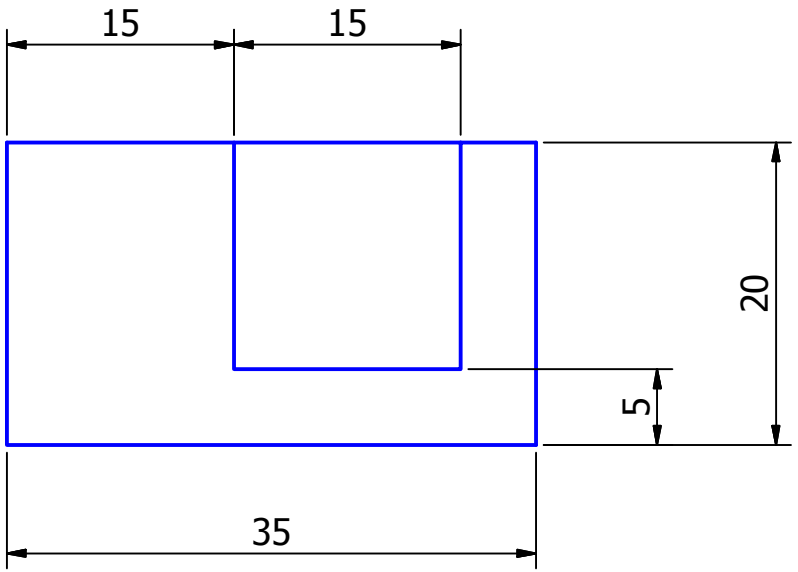

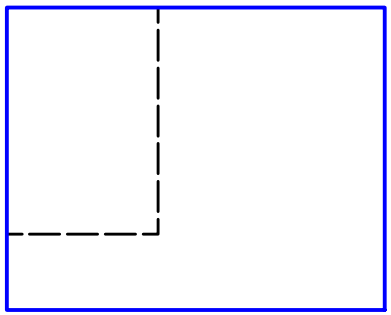

CADSTORY	TITLE	PART NO.	DESIGNED BY	DATE	VOLUME
	DWG514	P-514	SYPARK	13.05.28	

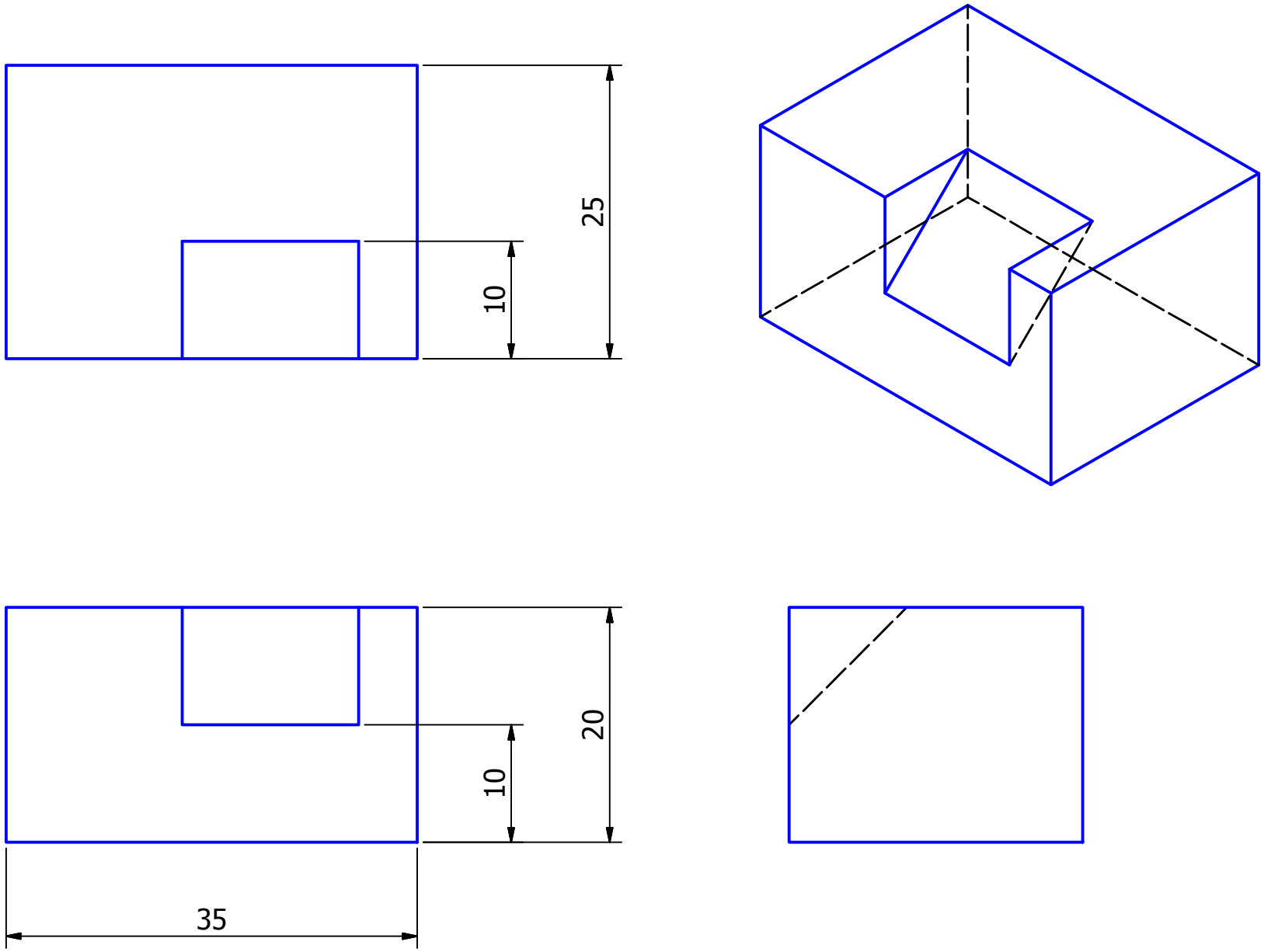

CADSTORY	TITLE	PART NO.	DESIGNED BY	DATE	VOLUME
	DWG515	P-515	SYPARK	13.05.28	

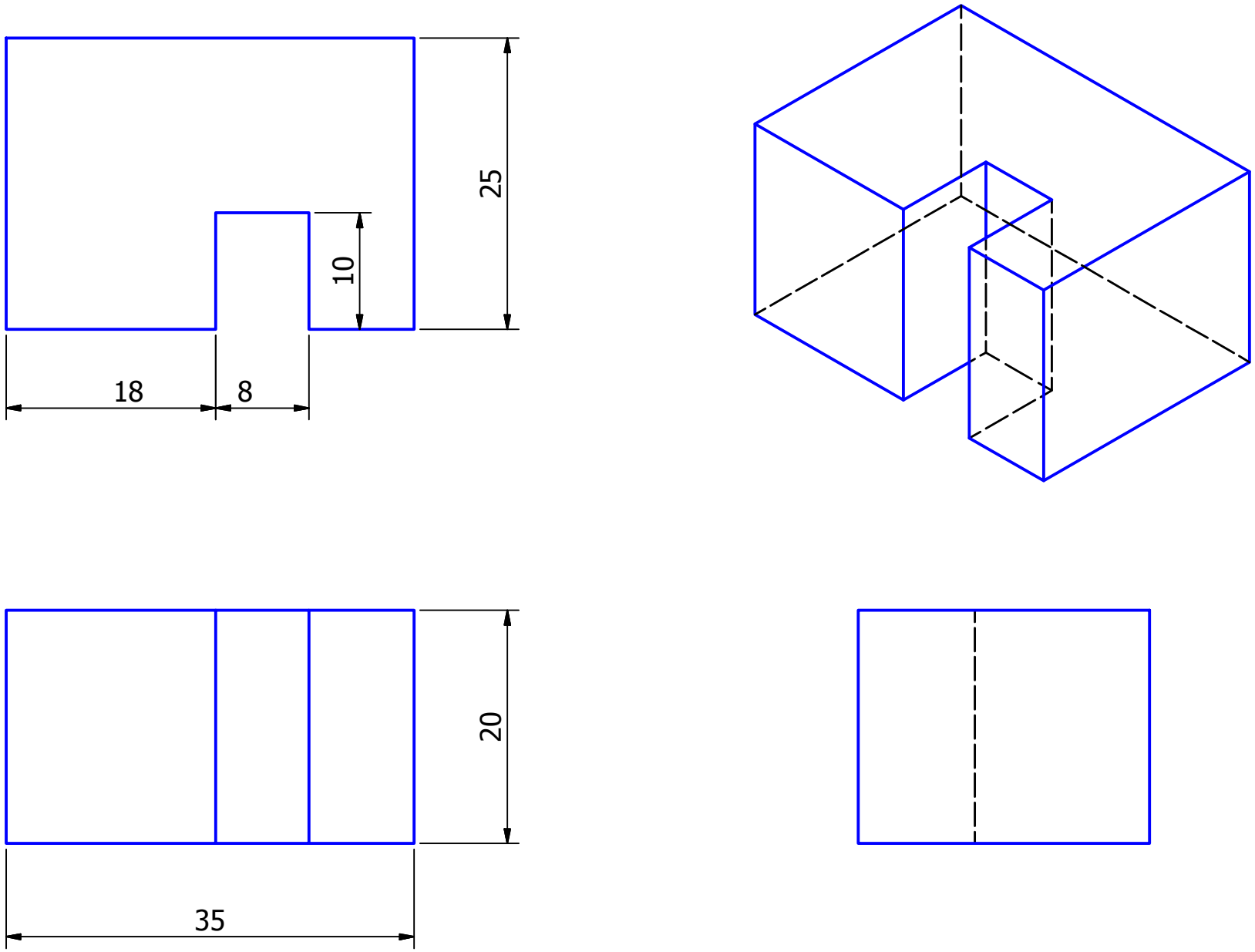

CADSTORY	TITLE	PART NO.	DESIGNED BY	DATE	VOLUME
	DWG516	P-516	SYPARK	13.05.28	

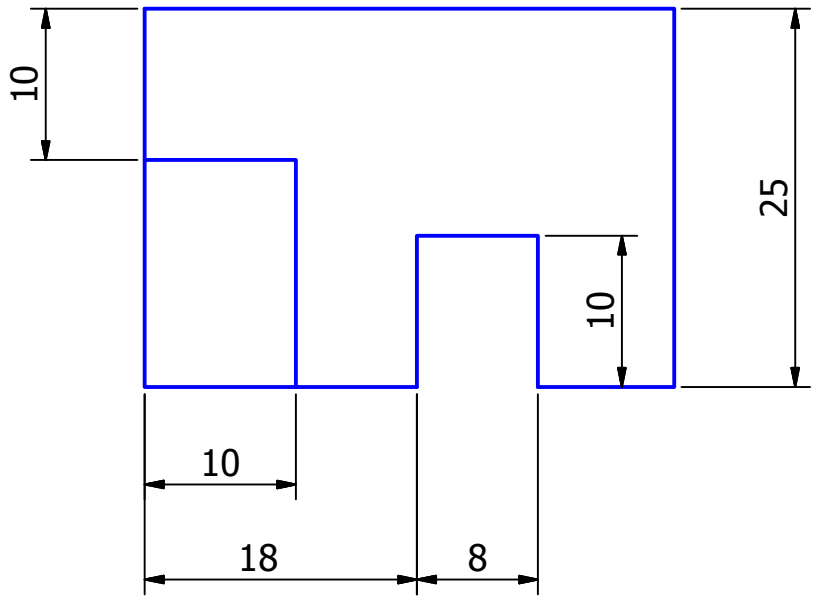

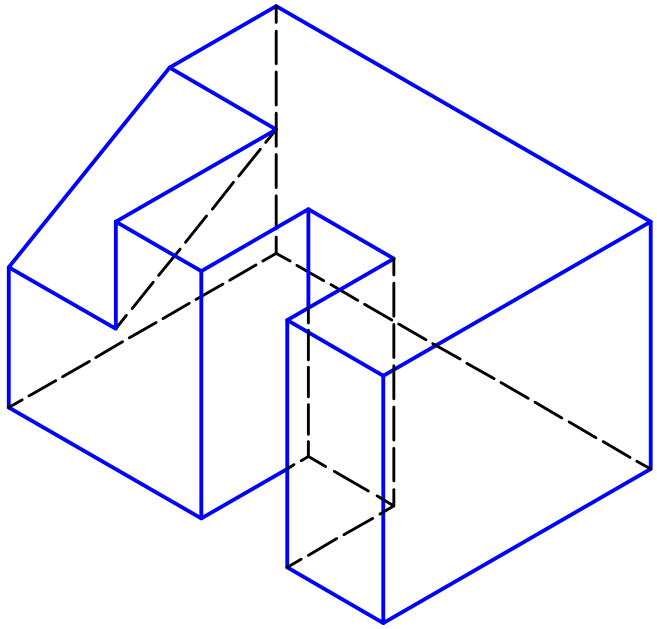

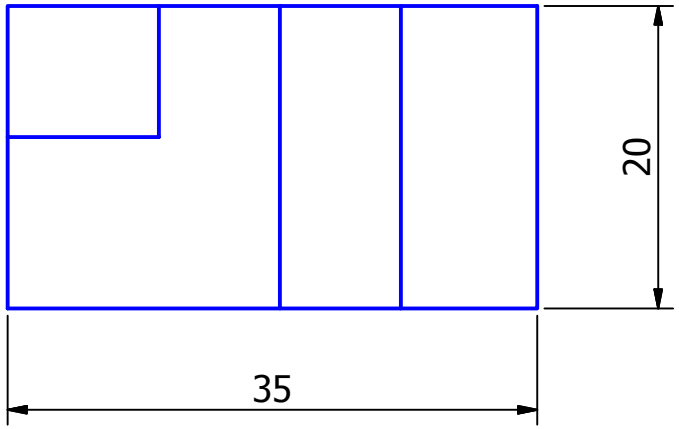

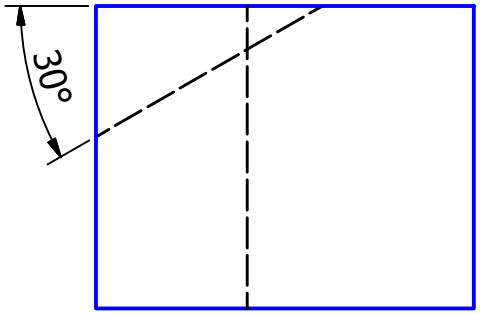

CADSTORY	TITLE	PART NO.	DESIGNED BY	DATE	VOLUME
	DWG517	P-517	SYPARK	13.05.28	

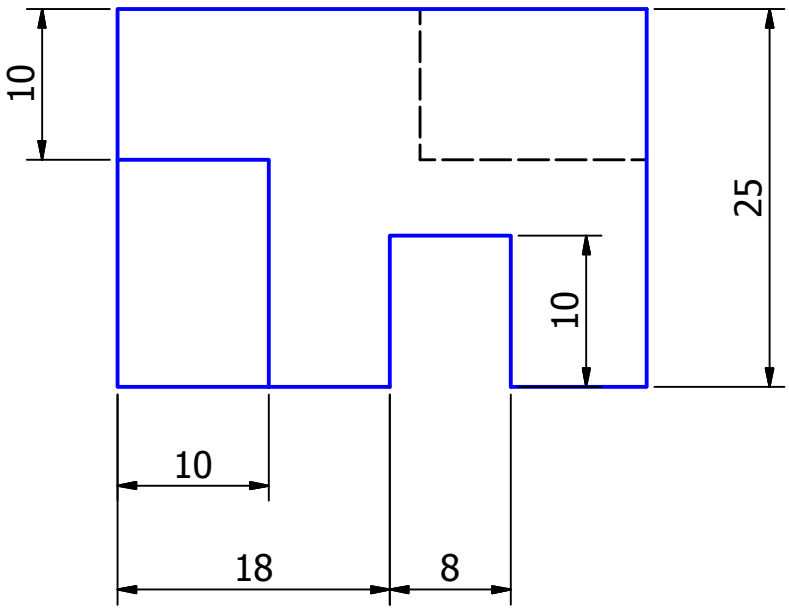

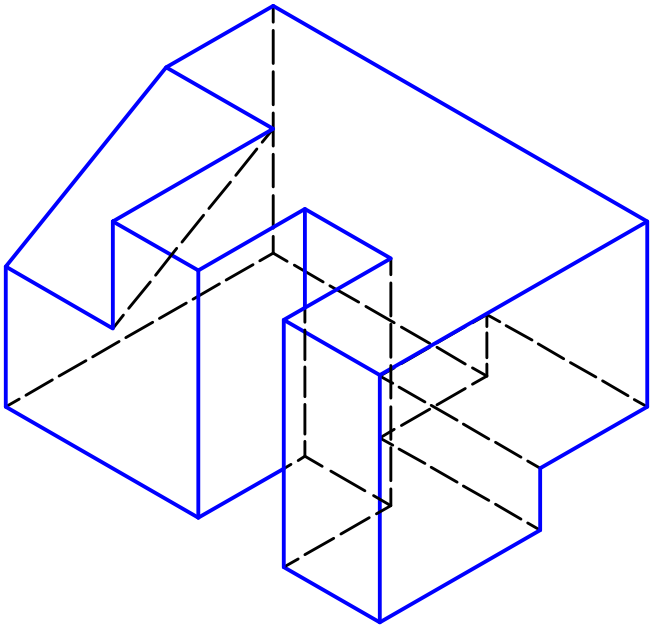

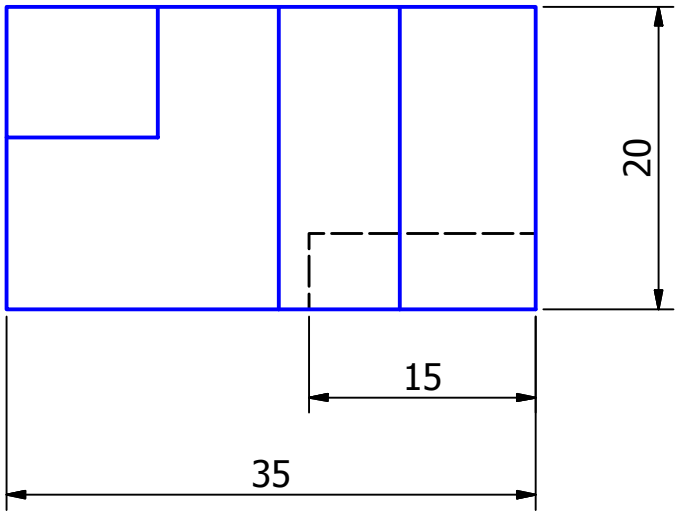

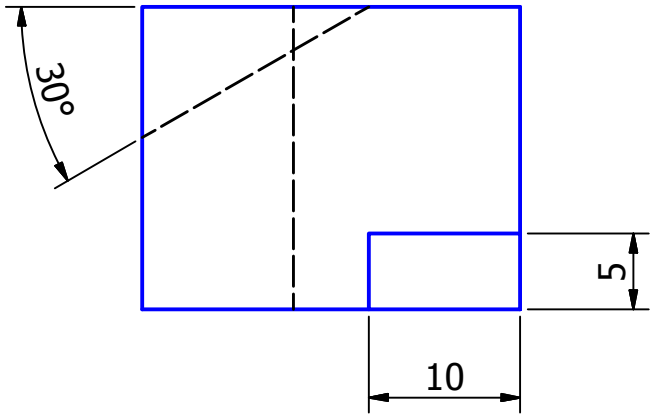

CADSTORY	TITLE	PART NO.	DESIGNED BY	DATE	VOLUME
	DWG518	P-518	SYPARK	13.05.28	

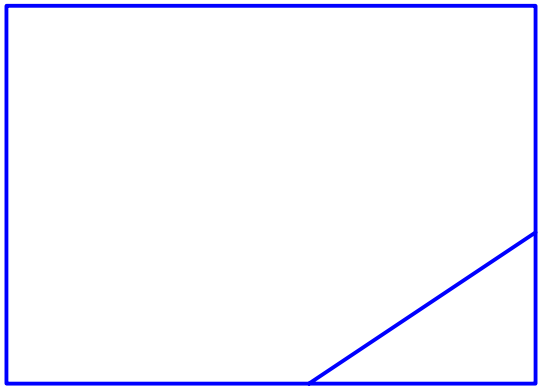

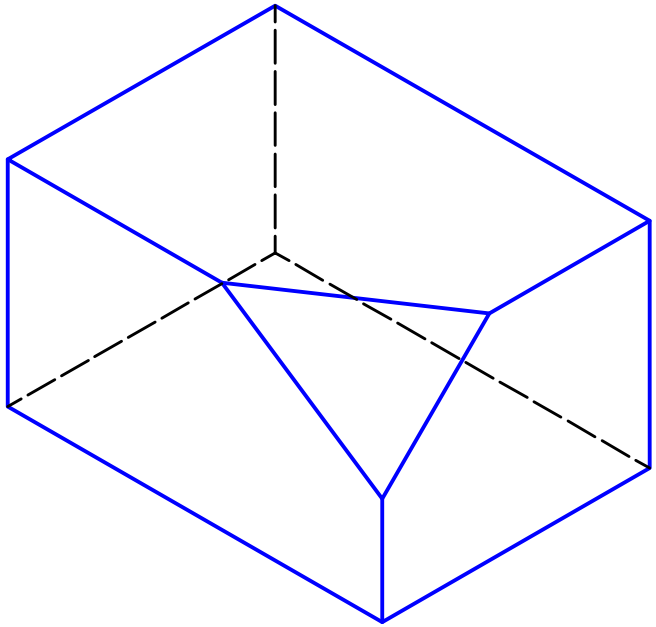

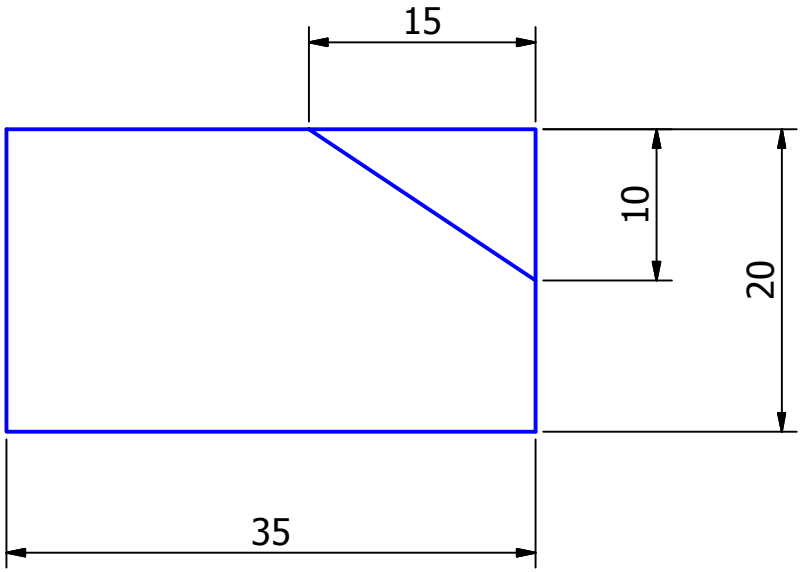

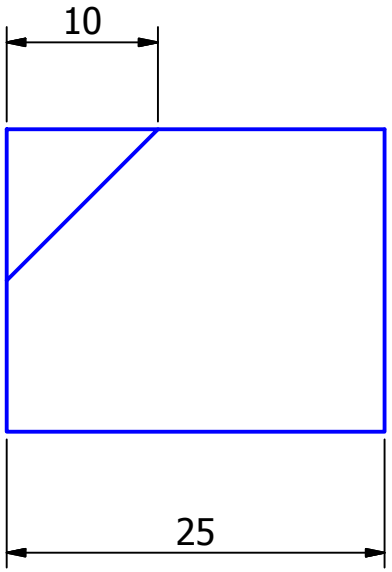

CADSTORY	TITLE	PART NO.	DESIGNED BY	DATE	VOLUME
	DWG519	P-519	SYPARK	13.05.28	

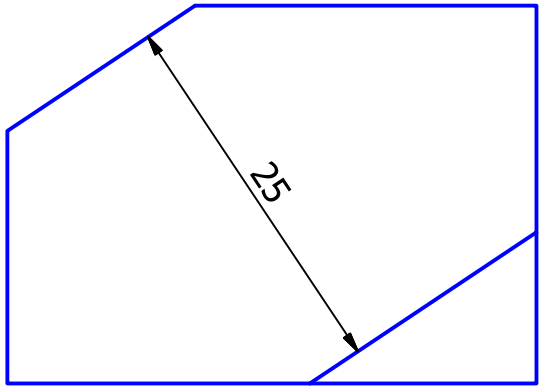

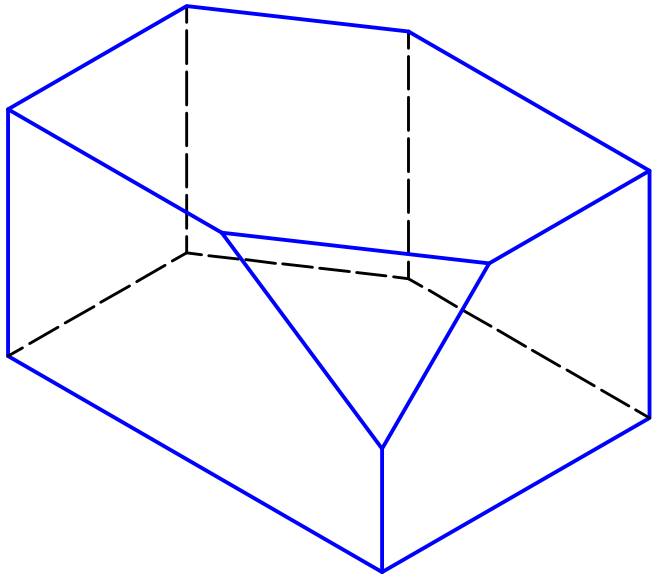

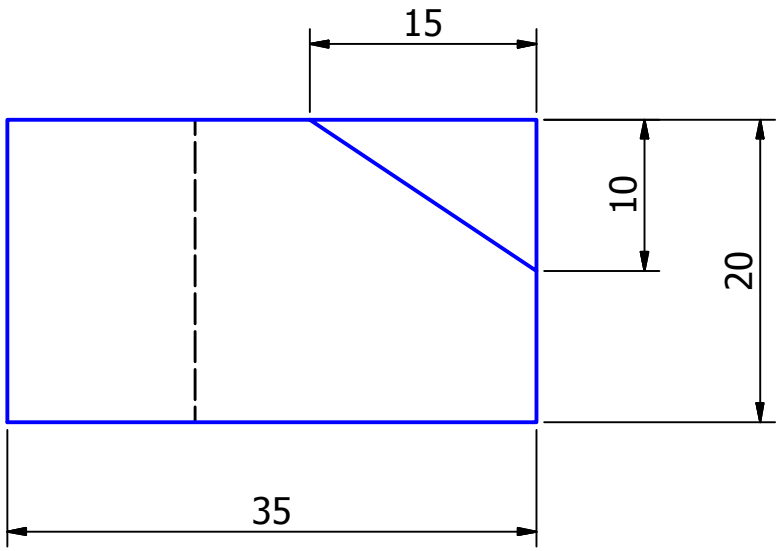

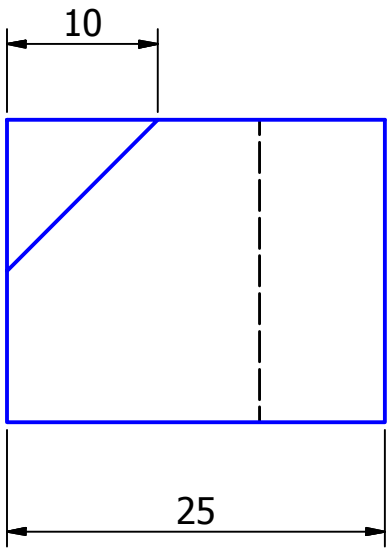

CADSTORY	TITLE	PART NO.	DESIGNED BY	DATE	VOLUME
	DWG-520	P-520	SYPARK	13.05.28	